DRIVING CIRCUIT DESIGN GUIDE

FOR BACKLIGHT AND DC-DC CONVERTER

Rev. 1.3

2026-11-17

Riverdi Sp. z o.o.

Nowy Swiat 36
80-299 Gdansk, Poland
VAT ID: PL5842767153
Registration number (KRS): 0000923967

+48 587 703 116

Office hours: 9:00 to 17:30 CET (Mon-Fri)

contact@riverdi.com

riverdi.com

This document is applied for the Riverdi HB, IPS, 7.0” LVDS series:

PRODUCT NAME	DESCRIPTION
RVT70HSLNWN00	HB, IPS, 7.0”, 1024x600, 1000cd/m², LVDS, No touch panel,
RVT70HSLFWN00	HB, IPS, 7.0”, 1024x600, 1000cd/m², LVDS, No touch panel, Metal frame
RVT70HSLNWC00-B	HB, IPS, 7.0”, 1024x600, 850cd/m², LVDS, uxTouch, Optical bonding
RVT70HSLNWC00	HB, IPS, 7.0”, 1024x600, 800cd/m², LVDS, uxTouch, Air bonding
RVT70HSLNWCA0	HB, IPS, 7.0”, 1024x600, 800cd/m², LVDS, aTouch, Air bonding
RVT70HSLFWCA0	HB, IPS, 7.0”, 1024x600, 800cd/m2, LVDS, aTouch, Air bonding, Metal frame

1. REVISION RECORD

REV NO.	REV DATE	CONTENTS	REMARKS
1.0	2022-12-20	Initial Release	
1.1	2024-02-05	Change R7 value to 30.9k and change R4 value to 22k to have VGL voltage -6V. Correct MIN and MAX values of VGL	
1.2	2024-03-08	Added information about input voltage for BLVCC.	
1.3	2026-11-17	Updated to new document template. Updated electrical parameters.	

© 2026 Riverdi

2. CONTENTS

1. REVISION RECORD 3
2. CONTENTS 4
3. BACKLIGHT DRIVING CIRCUIT 5
4. DRIVING CIRCUIT OF VGH/VGL/ AVDD/VCOM 7
5. CONTACT 9

3. BACKLIGHT DRIVING CIRCUIT

Internal backlight circuit of Riverdi HB, IPS 7.0” LVDS series is built with 9x3 (3LEDs in a row) LED matrix.

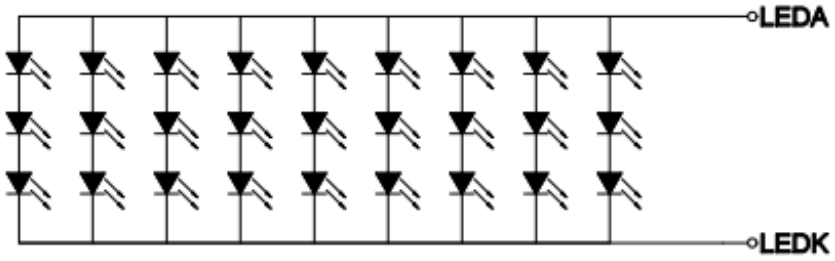

LED Diagram Circuit

Backlight parameters of Riverdi 7.0” HB, IPS LVDS series:

PARAMETER	SYMBOL	MIN	TYP	MAX	UNIT	NOTE
Backlight Driving Voltage	V_F	8.4	9.0	10.2	V	
Backlight Driving Current	I_F	-	270	-	mA	
Backlight Power Consumption	W_{BL}	-	2430	-	mW	
LED Lifetime	-	-	50,000	-	hours	Note 1

To get the full brightness, the driving current (I_F) needs to reach 270mA.

The recommended LED driver is TPS61169 or DIO566,

The input voltage for BLVCC is in range 2.7 to 5.5V.

For example, the feedback voltage of TPS61169: V_{FB} (max)=204mV

In our design, R26, R27 connected in parallel as a feedback resistor (R_{FB}) is set to 0.75R to achieve the full brightness.

I_F (max)=V_{FB} (max)/ R_{FB}

I_F (max)=204mV/0.75R≈272mA

Both TPS61169 and DIO5661 have PWM dimming control input to drive the LED current. TPS61169 and DIO5661 have built-in low-pass filter which changes internal feedback voltage. By that, inverter is not switched on-off with PMW signal but change LEDs current effectively in continuous way which cause low EMI emissions.

Please note that all Riverdi displays are designed to have low emission, that’s why many LC components like beads and capacitors are on the schematic. They are not necessary but strongly recommended.

Recommended PMW frequency is 5kHz – 100kHz for TPS61169 or 200Hz -200kHz for DIO5661.

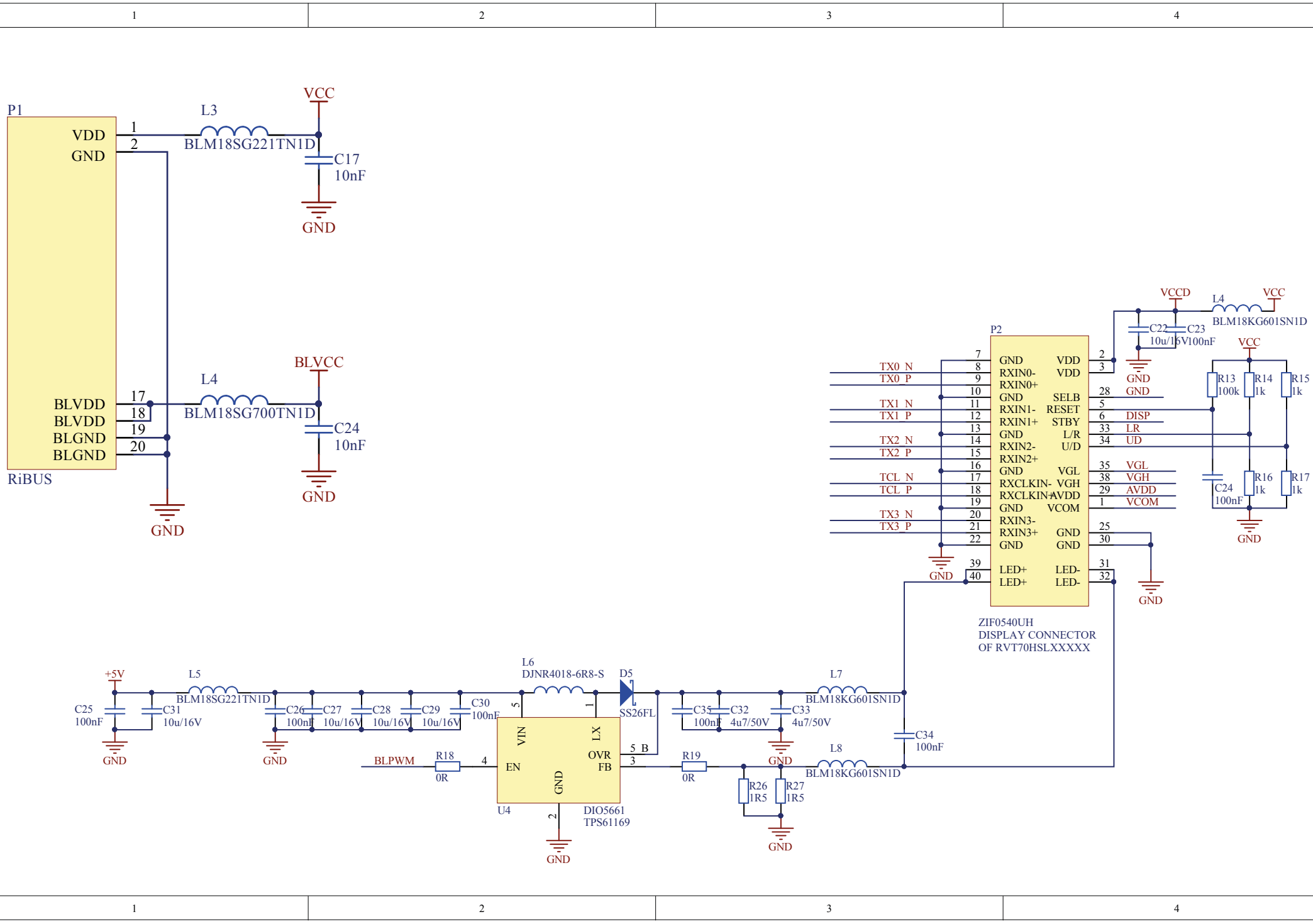
P1
VDD
GND
BLVDD
BLVDD
BLGND
BLGND
RiBUS
L3
BLM18SG221TN1D
C17
10nF
VCC
GND
L4
BLM18SG700TN1D
C24
10nF
BLVCC
GND
P2
ZIF0540UH
DISPLAY CONNECTOR
OF RVT70HSLXXXXX
TX0_N
TX0_P
TX1_N
TX1_P
TX2_N
TX2_P
TCL_N
TCL_P
TX3_N
TX3_P
RXIN0-
RXIN0+
RXIN1-
RXIN1+
RXIN2-
RXIN2+
RXCLKIN-
RXCLKIN+
RXIN3-
RXIN3+
SELB
RESET
STBY
L/R
U/D
VGL
VGH
AVDD
VCOM
DISP
LR
UD
LED+
LED-
VCCD
L4
BLM18KG601SN1D
C22
10u/16V
C23
100nF
R13
100k
R14
1k
R15
1k
R16
1k
R17
1k
C24
100nF
+5V
L5
BLM18SG221TN1D
C25
100nF
C31
10u/16V
C26
100nF
C27
10u/16V
C28
10u/16V
C29
10u/16V
C30
100nF
L6
DJNR4018-6R8-S
D5
SS26FL
C35
100nF
C32
4u7/50V
C33
4u7/50V
L7
BLM18KG601SN1D
C34
100nF
L8
BLM18KG601SN1D
BLPWM
R18
0R
R19
0R
R26
1R5
R27
1R5
U4
DIO5661
TPS61169
VIN
LX
OVR
FB
EN
GND

4. DRIVING CIRCUIT OF VGH/VGL/ AVDD/VCOM

Riverdi HB, IPS, 7.0" LVDS series TFT require VGH, VGL, AVDD and VCOM voltages to drive the TFT glass driver properly. Below tables are the VGH, VGL, VCOM, and AVDD specifications for Riverdi HB, IPS, 7.0" LVDS series.

Absolute maximum ratings:

PARAMETER	SYMBOL	MIN	MAX	UNIT
Power for Circuit Driving	VDD	-0.3	3.6	V
	AVDD	-	9.5	
	VGH	17	19	
	VGL	-6.5	-5.5	
	VCOM	3.0	4.0	

Electrical specifications:

PARAMETER	SYMBOL	MIN	TYP	MAX	UNIT	NOTE
Supply Voltage for Module	VDD	3.0	3.3	3.6	V	
	VGH	17	18	19		
	VGL	-6.5	-6.0	-5.5		
	AVDD	-	9.4	9.5		
	VCOM	3.6	3.8	4.0		
Current of Power Supply	I_{AVDD}	-	25	37.5	mA	
	I_{VDD}	-	25	37.5	uA	
	I_{VGL}	-	0.5	0.8	mA	
	I_{VGH}	-	0.37	0.56		
	I_{VGL}	-	0.5	0.8		
	I_{VCOM}	-	0.05	0.1		

The schematic of VGH, VGL, AVDD and VCOM circuit with AP3012KTR-E1 DC-DC converter.

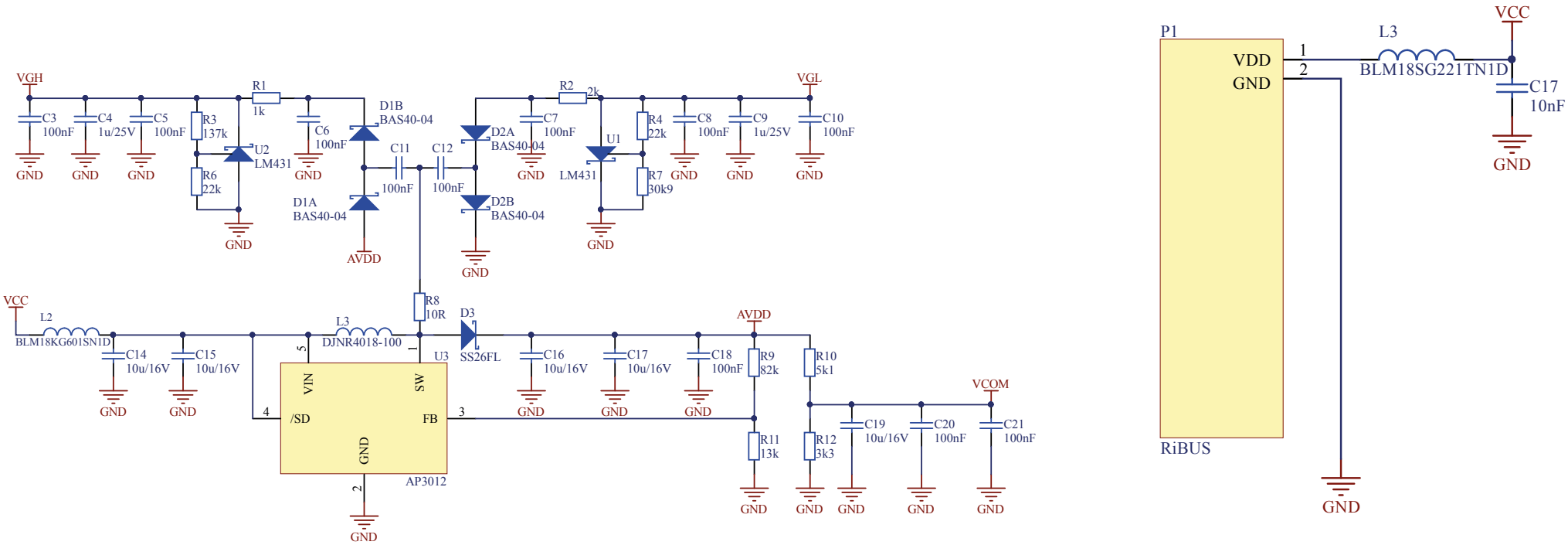
VGH
C3 100nF
C4 1u/25V
C5 100nF
R3 137k
R6 22k
R1 1k
U2 LM431
C6 100nF
D1B BAS40-04
D1A BAS40-04
C11 100nF
C12 100nF
AVDD
R2 2k
D2A BAS40-04
D2B BAS40-04
C7 100nF
U1 LM431
R4 22k
R7 30k9
C8 100nF
C9 1u/25V
C10 100nF
VGL
GND
VCC
L2 BLM18KG601SN1D
C14 10u/16V
C15 10u/16V
L3 DJNR4018-100
R8 10R
D3 SS26FL
U3
VIN
SW
/SD
FB
GND
AP3012
C16 10u/16V
C17 10u/16V
C18 100nF
R9 82k
R11 13k
R10 5k1
R12 3k3
C19 10u/16V
C20 100nF
C21 100nF
VCOM
P1
VDD
GND
L3 BLM18SG221TN1D
C17 10nF
RiBUS

5. CONTACT

Your Success is Our Priority

Stuck on a technical challenge? Need expert guidance?
Our dedicated support team is just a message away.

Contact us at
contact@riverdi.com

We're here to ensure your project's success, every step of the way!